MCU PMIC

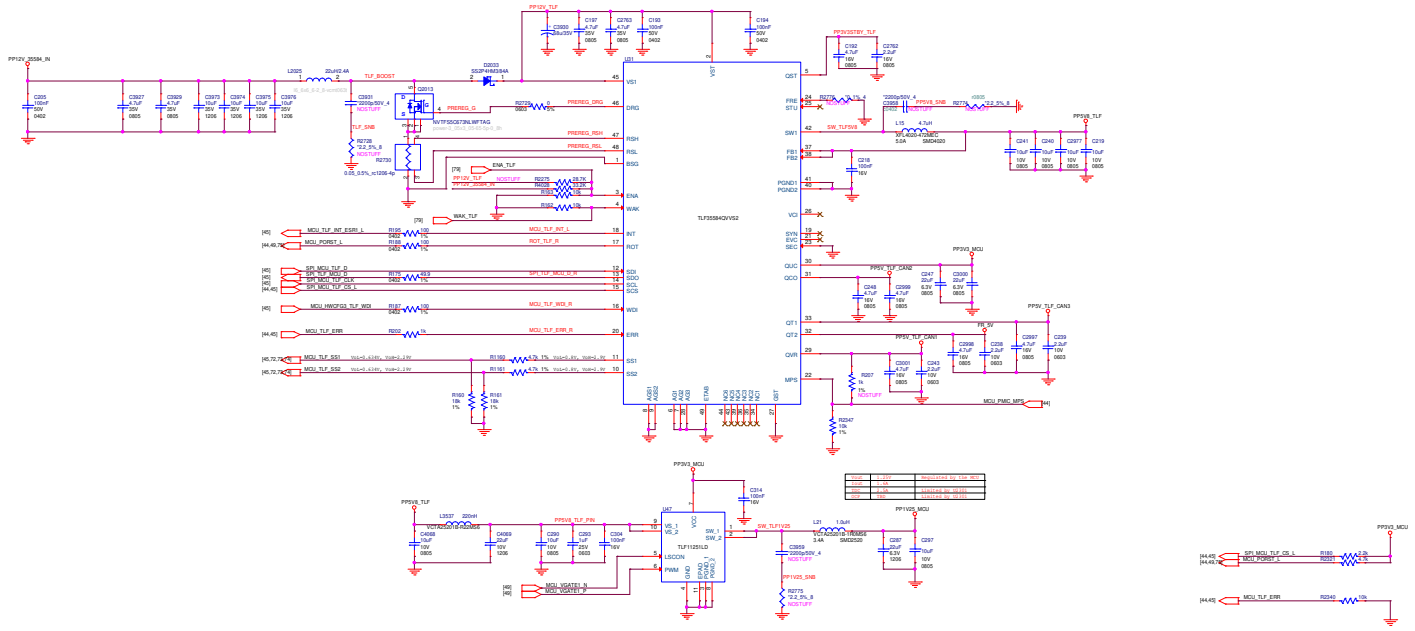
TLF35584QVVS2
PP12V_35584_IN
PP12V_TLF
PP3V3STBY_TLF
PP5V5_TLF
PP3V3_MCU
PP5V_TLF_CAN2
PP5V_TLF_CAN1
PP5V_TLF_CAN3
PP5V_TLF
PP5V5_TLF_PIN
PP1V25_MCU
PP1V25_SNB
TLF_BOOST
TLF_SNB
PREREG_G
PREREG_DRG
PREREG_RSH
PREREG_RSL
ENA_TLF
WAK_TLF
MCU_TLF_INT_ESRI_L
MCU_PORST_L
SPI_MCU_TLF_D
SPI_MCU_TLF_CLK
SPI_MCU_TLF_CS_L
MCU_HWCFG3_TLF_WDI
MCU_TLF_ERR
MCU_TLF_SS1
MCU_TLF_SS2
MCU_PMIC_MPS
MCU_VGATE1_N
MCU_VGATE1_P
SPI_MCU_TLF_CS_L
MCU_TLF_ERR
TLF1125ILD