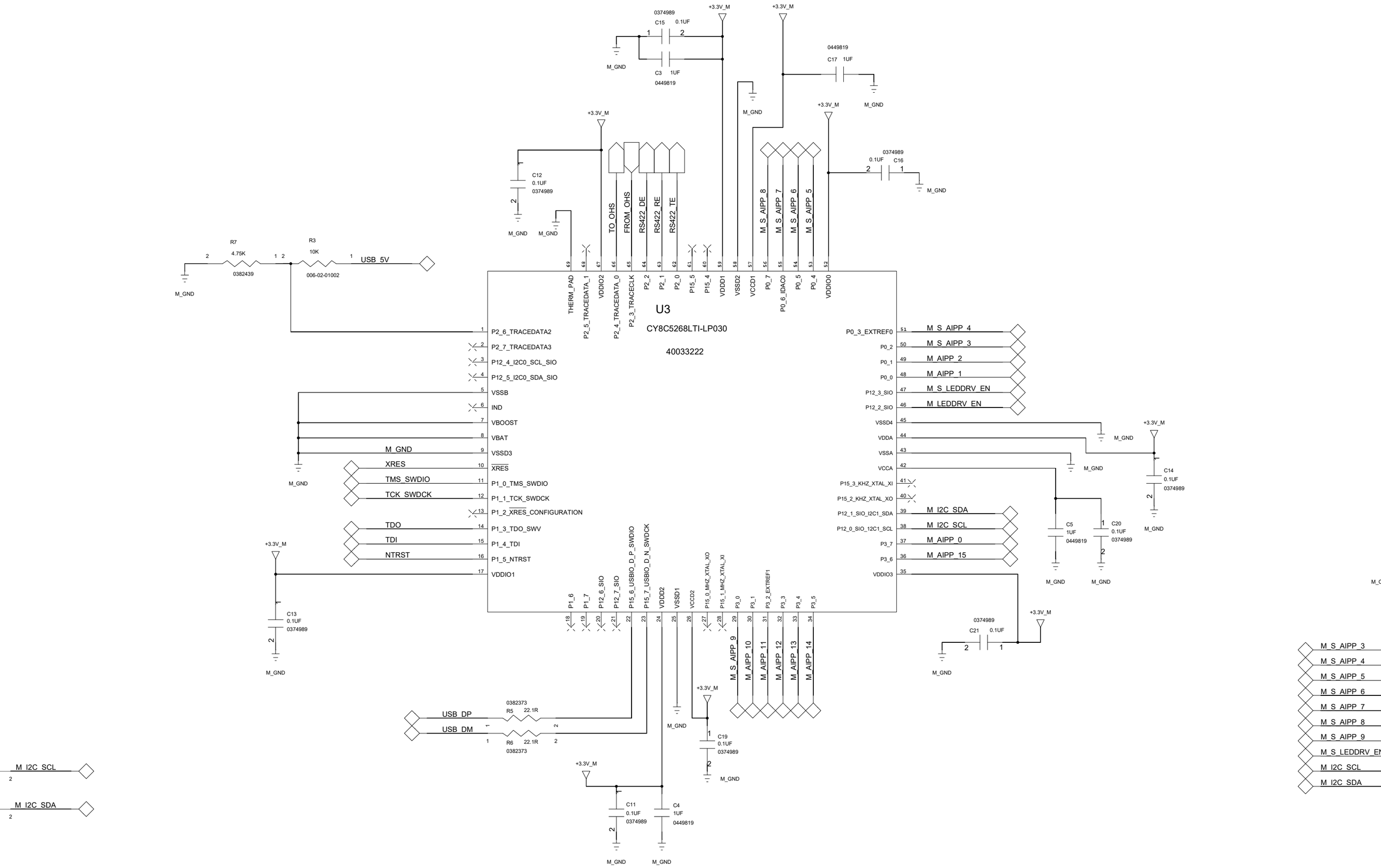
U3
CY8C5268LTI-LP030
40033222
THERM_PAD
P2_5_TRACEDATA_1
VDDIO2
P2_4_TRACEDATA_0
P2_3_TRACECLK
P2_2
P2_1
P2_0
P15_5
P15_4
VDDD1
VSSD2
VCCD1
P0_7
P0_6_IDAC0
P0_5
P0_4
VDDIO0
TO_OHS
FROM_OHS
RS422_DE
RS422_RE
RS422_TE
M_S_AIPP_8
M_S_AIPP_7
M_S_AIPP_6
M_S_AIPP_5
P2_6_TRACEDATA2
P2_7_TRACEDATA3
P12_4_I2C0_SCL_SIO
P12_5_I2C0_SDA_SIO
VSSB
IND
VBOOST
VBAT
VSSD3
XRES
P1_0_TMS_SWDIO
P1_1_TCK_SWDCK
P1_2_XRES_CONFIGURATION
P1_3_TDO_SWV
P1_4_TDI
P1_5_NTRST
VDDIO1
P0_3_EXTREF0
P0_2
P0_1
P0_0
P12_3_SIO
P12_2_SIO
VSSD4
VDDA
VSSA
VCCA
P15_3_KHZ_XTAL_XI
P15_2_KHZ_XTAL_XO
P12_1_SIO_I2C1_SDA
P12_0_SIO_12C1_SCL
P3_7
P3_6
VDDIO3
M_S_AIPP_4
M_S_AIPP_3
M_AIPP_2
M_AIPP_1
M_S_LEDDRV_EN
M_LEDDRV_EN
M_I2C_SDA
M_I2C_SCL
M_AIPP_0
M_AIPP_15
P1_6
P1_7
P12_6_SIO
P12_7_SIO
P15_6_USBIO_D_P_SWDIO
P15_7_USBIO_D_N_SWDCK
VDDD2
VSSD1
VCCD2
P15_0_MHZ_XTAL_XO
P15_1_MHZ_XTAL_XI
P3_0
P3_1
P3_2_EXTREF1
P3_3
P3_4
P3_5
M_S_AIPP_9
M_AIPP_10
M_AIPP_11
M_AIPP_12
M_AIPP_13
M_AIPP_14
USB_5V
USB_DP
USB_DM
M_GND
+3.3V_M
R7 4.75K 0382439
R3 10K 006-02-01002
R5 22.1R 0382373
R6 22.1R 0382373
C15 0.1UF 0374989
C3 1UF 0449819
C17 1UF 0449819
C12 0.1UF 0374989
C16 0.1UF 0374989
C14 0.1UF 0374989
C5 1UF 0449819
C20 0.1UF 0374989
C21 0.1UF 0374989
C13 0.1UF 0374989
C19 0.1UF 0374989
C11 0.1UF 0374989
C4 1UF 0449819
M_I2C_SCL
M_I2C_SDA
M_S_AIPP_3
M_S_AIPP_4
M_S_AIPP_5
M_S_AIPP_6
M_S_AIPP_7
M_S_AIPP_8
M_S_AIPP_9
M_S_LEDDRV_EN
M_I2C_SCL
M_I2C_SDA