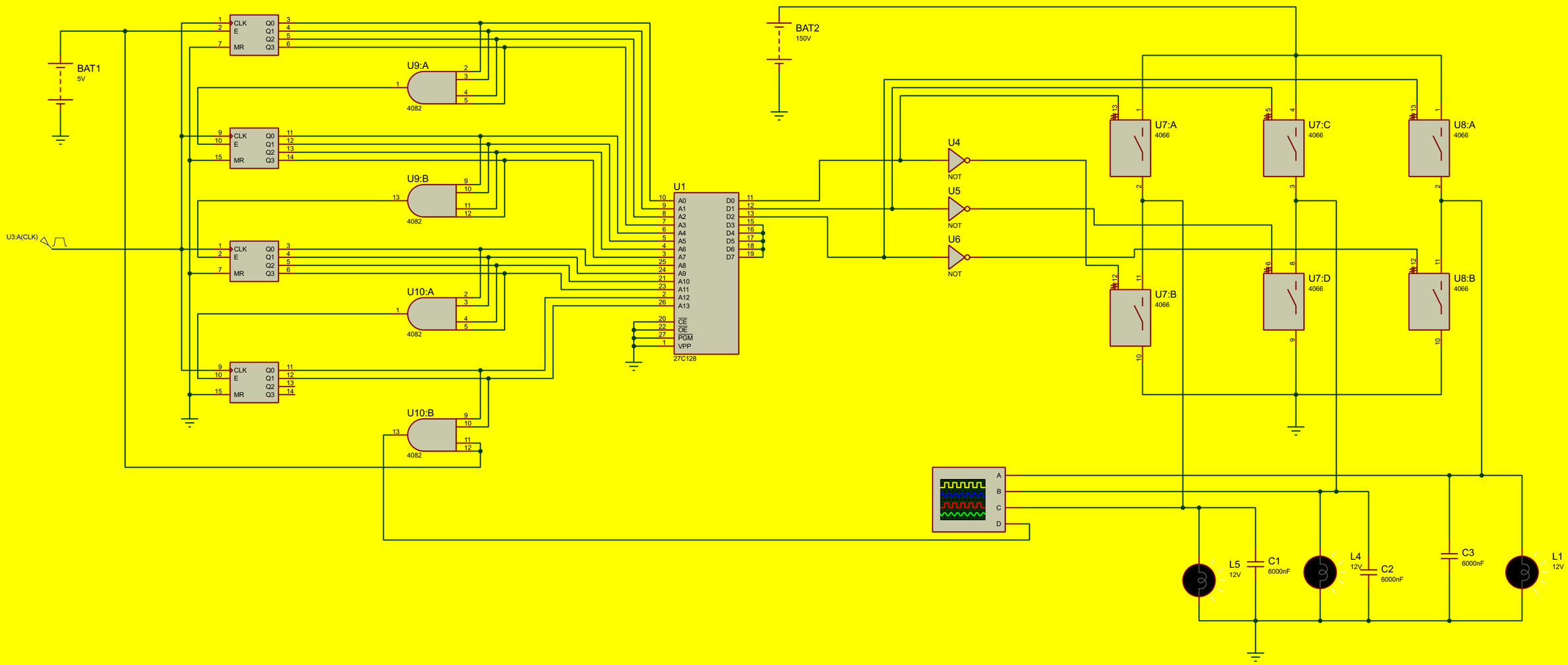

FILE NAME: New Project.pdsprj	DATE: 1/14/2017
DESIGN TITLE: New Project.pdsprj	PAGE: 1 of 1
PATH: F:\INVERTER\PROTEOUS_INVERTER\New Project.pdsprj	
BY: @AUTHOR REV: @REV	TIME: 2:55:39 AM