Page07: CCG4

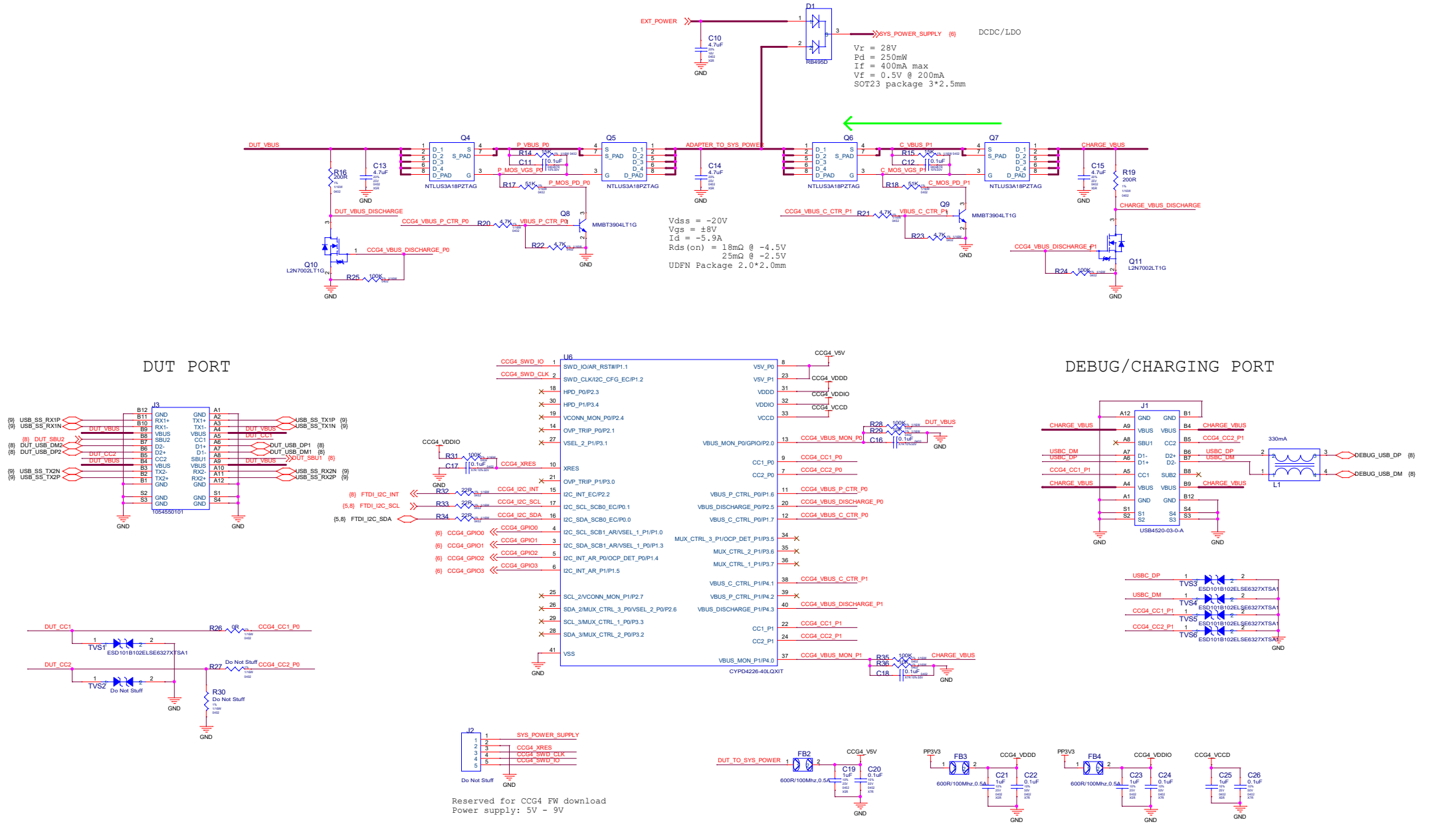

SMARTGIANT 思巨杰科技	Project Name	SG2360	
	Title	CCG4	
Customer HWTE	Drawn by	Peiwu.Ren	
Version V1.0	Checkd by	Max.Wrong	
Sheet 7 of 9	Approved by	<Approveder>	
Date 2023-02-13	Doc Number		