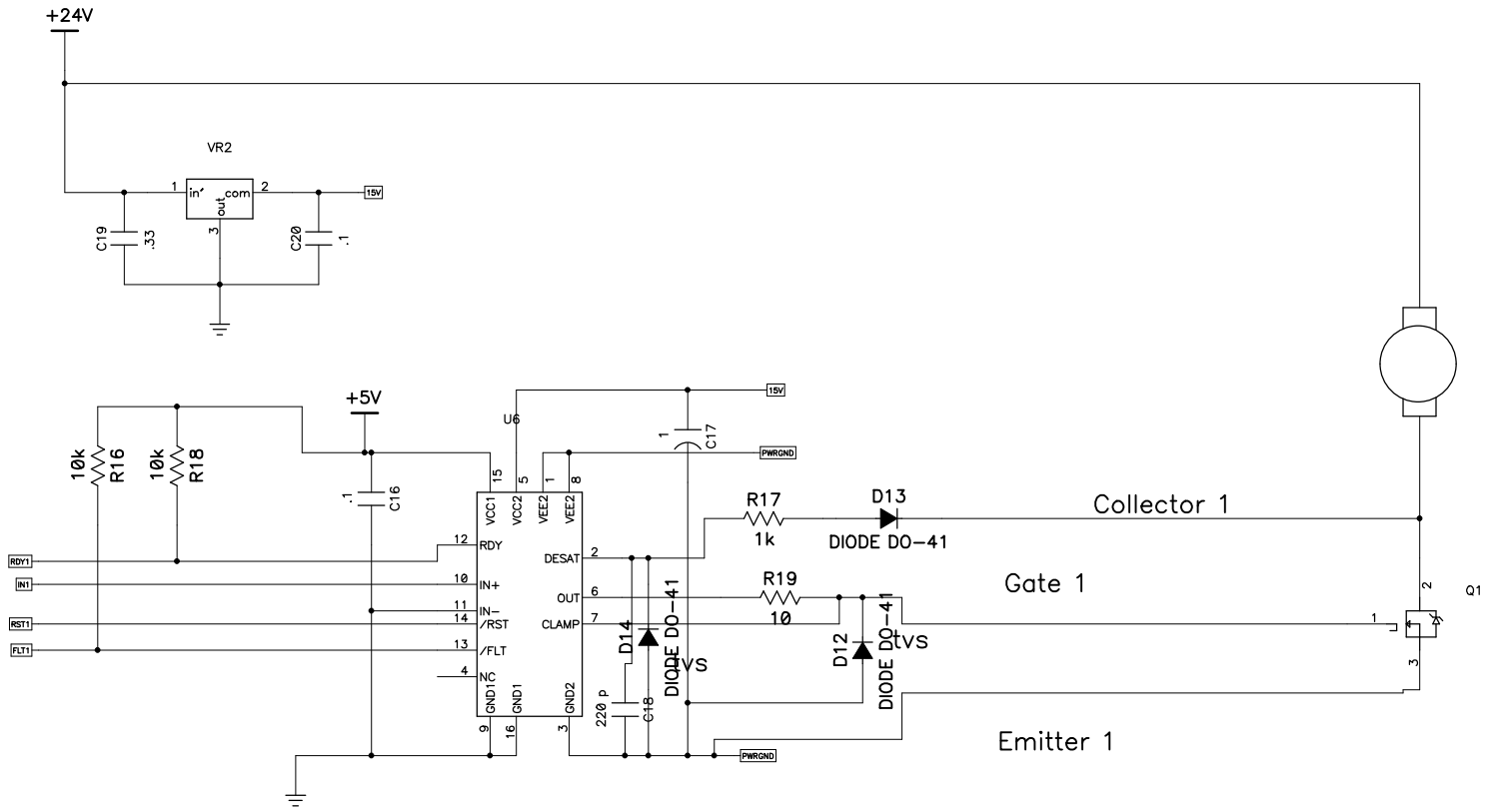
+24V
VR2
in
out
com
15V
C19
.33
C20
.1
+5V
10k
R16
10k
R18
.1
C16
U6
VCC1
VCC2
VEE2
VEE2
RDY
IN+
IN−
/RST
/FLT
NC
GND1
GND1
DESAT
OUT
CLAMP
GND2
RDY1
IN1
RST1
FLT1
PWRGND
C17
R17
1k
D13
DIODE DO−41
Collector 1
R19
10
Gate 1
D14
DIODE DO−41
tvs
D12
DIODE DO−41
tvs
220 p
C18
Emitter 1
Q1